807065 v1.01 03.21 On-Wall Boiling Quick Start Guide A1

Quick start guide

Models:

Econoboil (AU, NZ, UK) 3L, 5L, 7.5L

Autoboil 3L, 5L, 7.5L, 15L, 25L, 40L

Hydroboil 3L, 5L, 7.5L, 10L, 15L, 25L, 40L

Hydroboil Plus 3L, 5L, 7.5L

Tempo Tronic 3L, 5L, 7.5L, 15L, 25L, 40L

Tempo Tronic with Timer 3L, 5L

Visit our website to download the manuals.

Australia: zipwater.com
New Zealand: zenithwater.co.nz
UK: specify.zipwater.co.uk

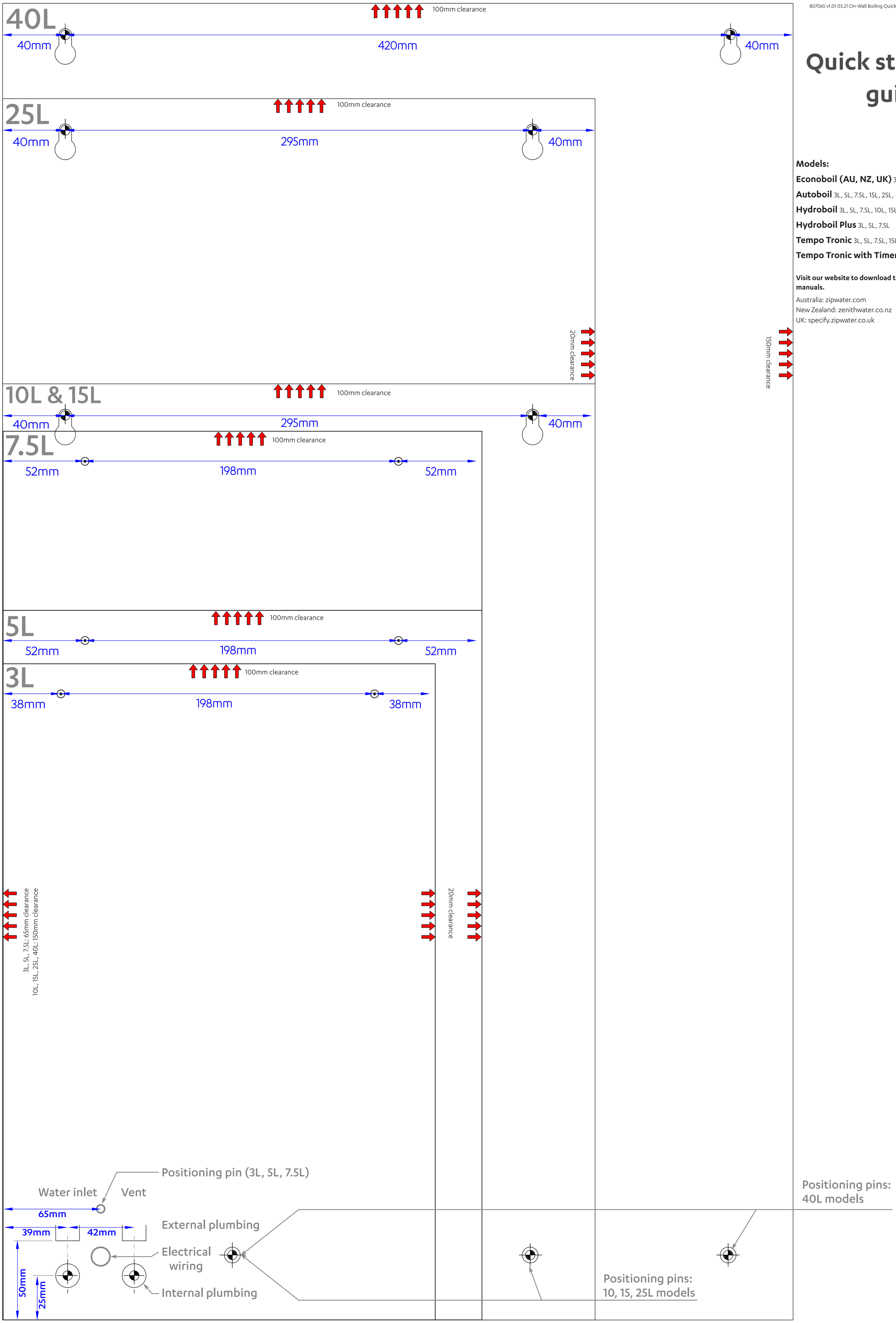

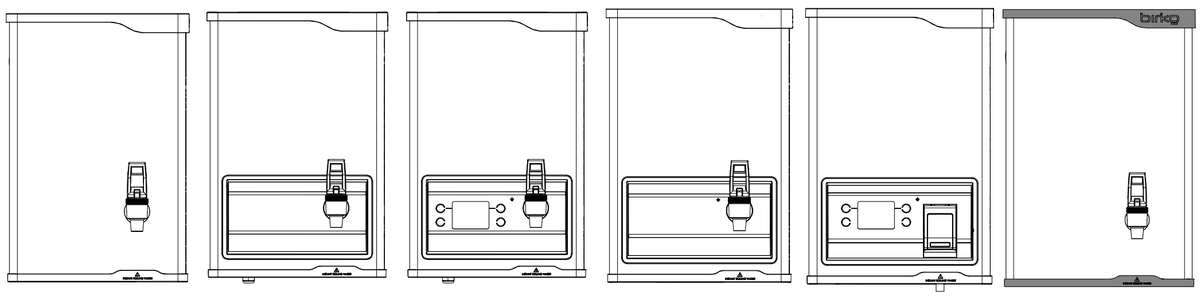

Econoboil (UK) | **Econoboil (AU/NZ)** | **Autoboil (AU)** | **Hydroboil** | **Hydroboil Plus** | **TempoTronic** (Timer optional)

3L, 5L, 7.5L, 10L 15L, 25L, 40L

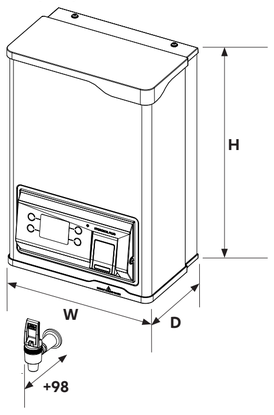

L		W x D x H (mm)	KG *
3.0	220-240V, 50Hz, 1400W 220V, 60Hz, 1250W	300 x 183 x 439	12
5.0	220-240V, 50Hz, 2200W 220V, 60Hz, 2000W	329 x 201 x 473	15
7.5	220-240V, 50Hz, 2200W 220V, 60Hz, 2000W	329 x 201 x 586	20
10.0	220-240V, 50Hz, 2800W 220V, 60Hz, 2500W	401 x 249 x 606	27
15.0	220-240V, 50Hz, 2800W 220V, 60Hz, 2500W	401 x 301 x 606	33
25.0	220-240V, 50Hz, 2800W 220V, 60Hz, 2500W	401 x 301 x 786	47
40.0	220-240V, 50Hz, 5400W 220V, 60Hz, 4800W 380-415V, 2N, 50Hz, 5600W 380V, 2N, 60Hz, 5000W	526 x 286 x 847	70

UK: 70 kPa (0.7 bar) - 500 kPa (5.0 bar)
AU/NZ: 150 kPa (1.5 bar) - 700 kPa (7.0 bar)

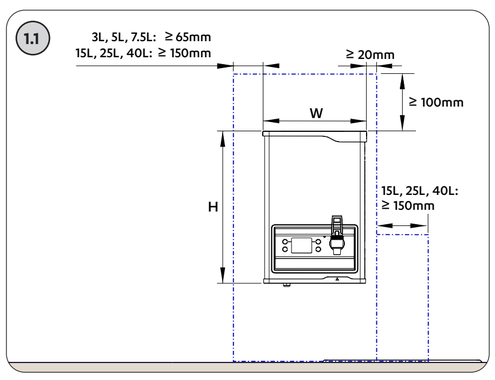

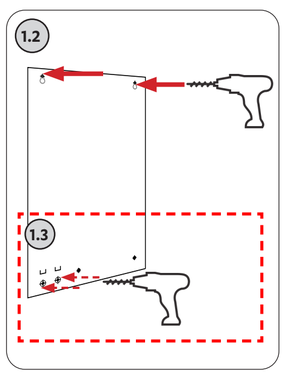

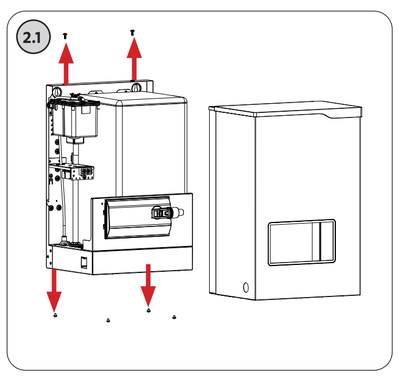

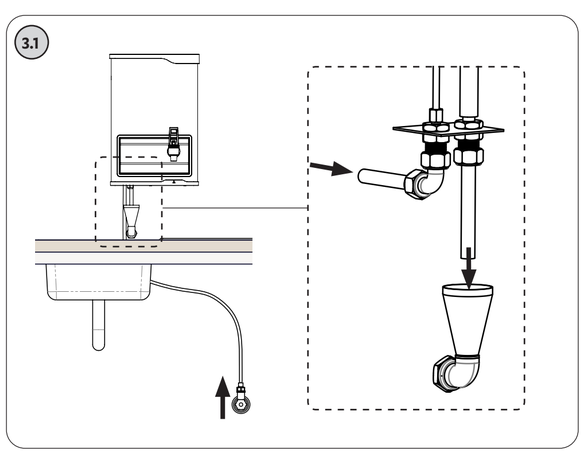

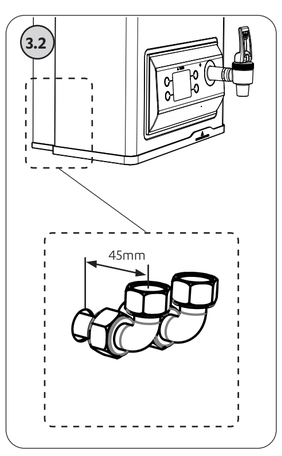

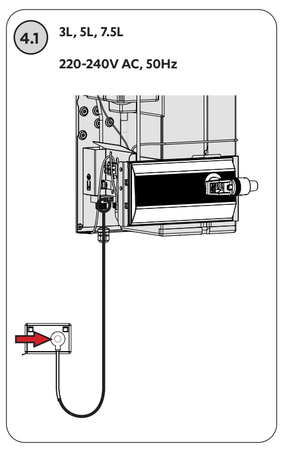

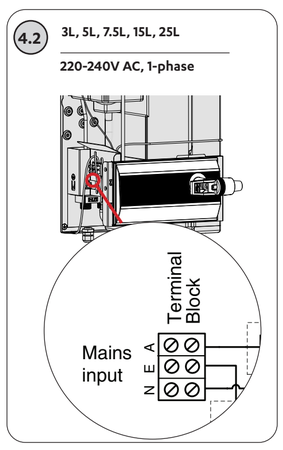

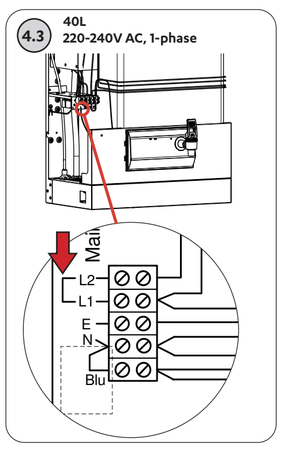

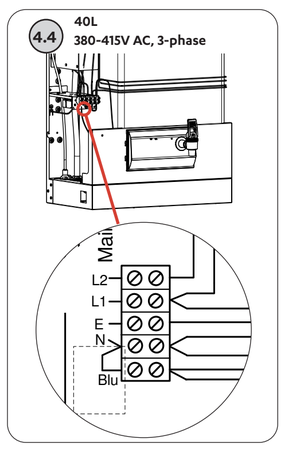

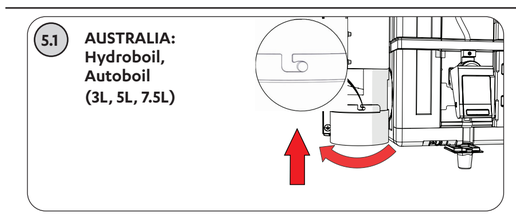

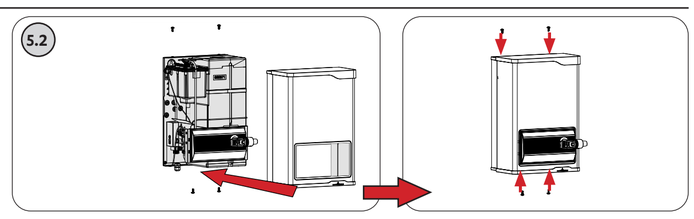

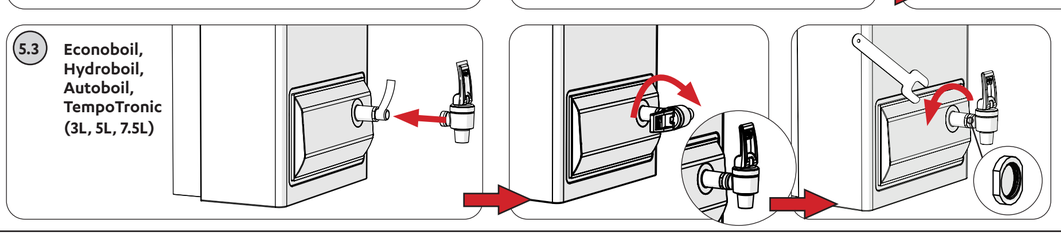

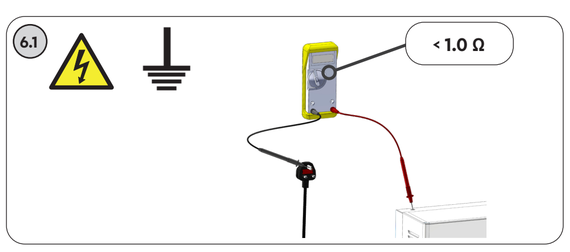

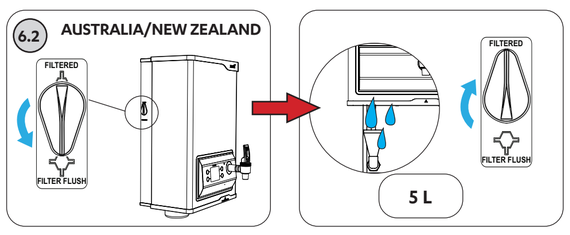

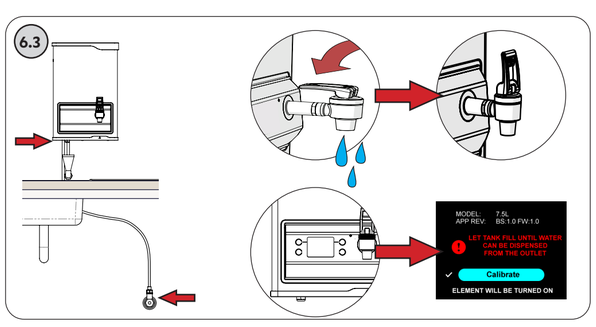

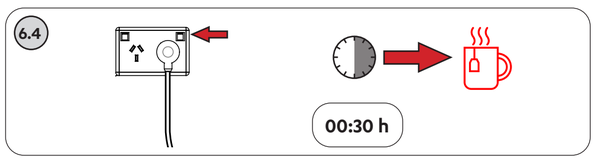

Econoboil, Hydroboil, Autoboil, TempoTronic

Hydroboil Plus

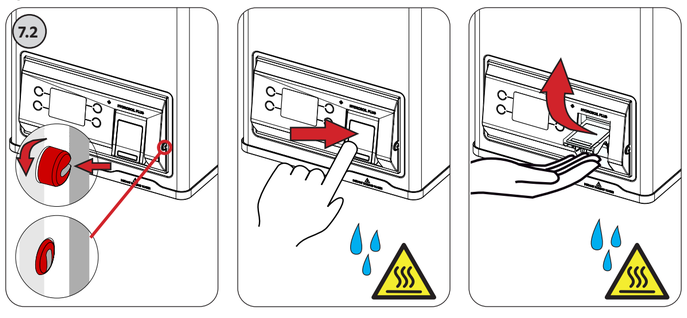

Installation instructions

Before installation, ensure that:

- The mounting wall can support the product weight when full of water. *as shown in table to the left
- Sufficient space is provided to install the appliance, cable and plumbing.
- An easily accessible socket and double pole isolation switch (correctly rated for the appliance) is required. For models rated below 3kW: 220-240V AC 50-60Hz; for models rated above 3kW: 380-415V AC mains power.
- The appliance must be connected to a potable water supply with working pressure of: AU/NZ 150 - 700 kPa (1.5 - 7.0 bar); UK 70 - 500 kPa (0.7 - 5.0 bar).
- The appliance must be connected with an isolating valve within reach of the hose and positioned so that the valve will not be obstructed.
- A 350 kPa (3.5 bar) pressure limiting valve (not supplied) must be fitted if the incoming mains water pressure is likely to exceed 500 kPa (5.0 bar)
- The appliance must be placed upright with its base in a horizontal position.

IMPORTANT! Do not proceed with the installation if these requirements are not met.

1. Positioning

1.1 Place the paper template (on the back of these instructions) on the wall. Mark corners of the appliance on the wall. Allow clearances as follows:
3.5L, 5L, 7.5L: 65mm left side, 20mm right side, 100mm above
15L, 20L, 40L: 150 mm left and right side, 100mm above
1.2 Drill holes as shown on the paper template.
1.3 OPTION: Drill holes for concealed plumbing and electrical connections.

2. Fastening

2.1 Remove screws from case (4-off for 3L, 5L, 7.5L; 6-off for 10L, 15L, 25L, 40L). Remove the case. Use wall screws (note: only supplied in UK) to mount the appliance to the wall.

3. Plumbing

IMPORTANT:

- Cold water pipes must be flushed before connection to the inlet to prevent blockages from affecting operation of the appliance.
- An isolation valve (not supplied) must be fitted to the water supply.
- All Vent pipework:
  - must be installed with continuous fall.
  - must be no more than 3 metres in length.
  - must have no more than 3 right-angle bends.

3.1 Plumbing option 1: Exposed
Connect cold water inlet pipe from the base of the appliance directly to the 12.77mm (1/2" BSP) compression fittings using nuts and olives.
Install a visible tundish and plumb the Vent to trapped waste. AU models: ensure access for filter replacement is not obstructed.
3.2 Plumbing option 2: Concealed
Connect cold water pipe through the rear of the appliance using a 12.7mm (1/2" BSP) capillary elbow (e.g. No.63, loose nut elbow).
Connect vent from the concealed rear of the appliance to a dia12.7mm pipe. Vent outlet must be visible and discharge to a waste water drain.

4. Electrical

! All wiring must be performed by a qualified electrician. Refer to relevant electrical codes and guidelines for installation requirements for local installation conditions and your product's power rating.
4.1 Exposed electrical connection (option for 3L, 5L, 7.5L models)
If a power cable is not already fitted, connect a cable to the terminal block on the PCB, via the cable gland.
With power cable fitted, connect the cable plug to a 220-240V AC power outlet.
Do not turn power ON!
4.2 Concealed electrical connection (15L, 25L, 40L models; option for 3L, 5L, 7.5L models)
If a power cable is fitted, disconnect from PCB and discard.
Connect a concealed power cable through the rear access opening to the terminal block, via the cable gland.
Crimp a 6.3mm QC female spade connection to the earth conductor. Attach to the earth male terminal on the chassis.
An isolation switch should be installed (in AU, according to AS3000).
Do not turn power ON!
4.3 Single phase 220-240V option (40L models only)
L1 and L2 need to be bridged on installation. The single phase supply must be sufficient to handle the power of the unit (i.e. 25A or above)
4.4 3-phase 380-415V option (40L models only)
2 out of 3 phases are connected to L1 and L2. No bridging between L1 and L2 is required

5. Assembly

5.1 AU only: 3L, 5L, 7.5L models. Refit filter guide
5.2 All models: Refit cover. Fix with screws at top and bottom.
5.3 (Econoboil, Autoboil, Hydroboil, TempoTronic) Apply thread tape to thread. Turn tap until it touches the lock nut and is upright. Use spanner (supplied) to tighten the lock nut.

6. Commissioning

Warning: This appliance must be earthed.
Ensure electrical power is OFF until water is available from the tap outlet, to prevent damage.
Water dispensed during commissioning may be boiling.
6.1 Check earthing with a resistance meter between power plug and cover fixing screw, then the tap. Electrical resistance must not exceed 1 ohm.
6.2 AU models: Filter flush
Rotate valve to FILTER FLUSH
Turn ON mains water. Allow 5 litres to flow from vent out-let, to flush the filter. Note: water should NOT flow into the tank.
Rotate valve to FILTERED. Water flows into the tank.
6.3 Check water connections
Turn ON mains water to fill the tank.
Check connections and repair any leaks.
6.4 Turn ON electrical power. Boiling Calibration will commence automatically for models without a user interface screen. For models with a user interface screen, refer to the screen and touch the commands to proceed when ready. The tank will fill and heat. Allow 15-30 minutes for the water to reach boiling set temperature.

7. Operation

7.1 (Tap models) Press lever to dispense boiling water.
Push lever to lock, for continuous flow. If lever does not lock, rotate it 180° before dispensing.
7.2 (Paddle models) Ensure lock button is depressed.
Press paddle to dispense boiling water.
Pull paddle to lock, for continuous flow.

Manufactured by:

Zip Water (Aust) Pty Ltd
ABN 46 000 578 727
67-77 Allingham Street, Condell Park NSW 2200
Postal: Locked Bag 80, Bankstown 1885
Free Call in Australia: 1800 ZIP TAP (1800 947 827)
(+612) 9796 3100 | zipwater.com

Distributors:

Zenith Water NZ
18 Kawakawa Place, Westgate, Auckland NZ 0814
Free call in NZ: 0800 558 055 | +649 838 8612 | zenithwater.co.nz

Zip Water UK
Trafalgar House, Rash's Green, Dereham, Norfolk NR19 1JG
0345 6 005 005 | sales@zipindustries.co.uk | zipwater.co.uk

Culligan China Water Treatment Equipment Trading (Shanghai) Co., Ltd. CN
29 Floor, Cura International Center, No. 500
Hongqiao Road, Xuhui District, Shanghai, China, 200000
Ph: +8621-6447-9373 | Fax: +8621-6447-9935
www.zipwater.com.cn

Culligan Middle East FZE
National Industries Park P.O. Box 263151, Dubai, U.A.E.
Office: (+971) (0) 4 803 0100 | Fax: (+971) (0) 4 880 6055
info.cdw@culligan.ae | www.culligan.ae

IMPORTANT SAFETY INSTRUCTIONS

Safety
This appliance can be used by children aged from 8 years and above and persons with reduced physical, sensory or mental capabilities or lack of experience and knowledge if they have been given supervision or instruction concerning use of the appliance in a safe way and understand the hazards involved. Children should be supervised to ensure that they do not play with the appliance. Cleaning and user maintenance shall not be made by children without supervision.

Qualifications
If the power cable is damaged it must be replaced by a qualified technician.
To avoid hazards, all installation procedures must be carried out by a suitably qualified tradesperson.

Venting
Occasionally steam and / or boiling water may discharge through a vent outlet or the tap. Ensure the tap body is located so the tap outlet safely dispenses into the drip tray or sink bowl area, and the vent is plumbed to a safe location.

Lifting
Take care when lifting. The appliance may exceed safe lifting limits. If you feel this is beyond your personal capabilities, please seek assistance with the lift. Do not lift the appliance by the tap or any of its connections. Refer to the Technical specification for the weight of the product.

Positioning
Ensure the appliance is positioned in an accessible area. The appliance must be installed upright, with its base in a horizontal position.

Frost protection
If the appliance is located where ambient air temperature could fall below 5ºC when the appliance is not in use, do not turn it off electrically. This safeguard does not offer the same protection to the connecting pipework and fittings.

WARNINGS AND PRECAUTIONS

1. For continued safety of this appliance it must be installed, operated and maintained in accordance with the manufacturer's instructions.
2. This appliance may deliver water at high temperature. Refer to the Plumbing Code of Australia (PCA), local requirements and installation instructions to determine if additional delivery temperature control is required.
3. All plumbing and electrical connections must be made in accordance with local regulations and relevant standards. For Australia/NZ: electrical installation must comply with AS/NZS 3000. For Australia/NZ:, plumbing installation must comply with Plumbing standard AS/NZS 3500. UK: the system must be installed in accordance with water supply byelaws, current IEEE regulations and local authority byelaws.
4. All installation and service work must be completed by trained and suitably qualified tradespeople. Faulty operation due to unqualified persons working on the product may void warranty coverage.
5. ⏚ This appliance must be earthed. The resistance of the earth connection from each exposed metal part must be less than 1 ohm.
6. The power cord and general power outlet must be in a safe and accessible position after installation.
7. Any disconnection to the fixed wiring must be in accordance with local regulations and relevant standards including AS/NZS 3000.
8. Do not remove the cover of the appliance under any circumstances without first isolating the appliance from the power supply.
9. The cold water supply to this appliance must be potable and fall within your local authority guidelines.
10. The installer is responsible to supply and install all valves as required by local regulations and relevant standards.
11. In hard water areas where mineral scale accumulation may become a problem, consideration should be given to the maintenance required. A suitable form of water treatment may be necessary.
12. This appliance is designed for indoor use and must not be installed outdoors or exposed to the elements of nature.
13. This appliance must operate within ambient temperatures of 5ºC - 50ºC.
14. Do not clean this appliance with a water jet. Do not position this appliance in an area that may be cleaned by a water jet.
15. This appliance is not intended for use by young children or infirm people without supervision. Young children should be prevented from having access to ensure that they are not able to use or play with the appliance.
16. This appliance is intended to be used in: staff kitchen areas in shops, offices and other working environments; farm houses and by clients in hotels, motels and other residential type environments; bed and breakfast type environments; catering and similar non-retail applications.
17. Due to the process of continuous improvement, the manufacturer reserves the right to change details mentioned in this manual, without notice. Visit the website of the manufacturer/distributor to ensure you have the latest copy of this document.