Burj Mixers

Hob Tower Basin Mixer - Fixed

designed and built in Australia

PAR TAPS

Product Code

A20.012.1

- **WELS Rating**
  6-Star 4.5LPM
- 25mm Cartridge
- Fixed Outlet

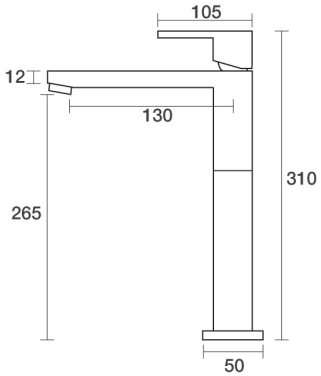

Finish Option 1

Brushed Chrome	.02
Brushed Nickel	.25
Matt Black	.34
Bright Nickel	.47

Finish Option 2

Gold	.11
Brushed Gold	.12
Rose Gold	.20
Brushed Rose Gold	.21
Gunmetal	.23
Brushed Gunmetal	.24
Brass Gold	.38
Rumbled Brass	.40
Brushed Brass	.41
Raw Brass	.43
Native Brass	.45
Burnished	.52
Volcanic Gray	.54

Finish Option 3 - Upon Request

email sales@partaps.com.au for availability and pricing

Sizes are an appoximate.
All measurements shown are in millimetres.

PHONE: +61 3 9484 0960 EMAIL: sales@partaps.com.au